Cambridge International AS & A Level

Cambridge International Examinations
Cambridge International Advanced Subsidiary and Advanced Level

PHYSICS **9702/11**

Paper 1 Multiple Choice **October/November 2016**

1 hour 15 minutes

Additional Materials: Multiple Choice Answer Sheet
Soft clean eraser
Soft pencil (type B or HB is recommended)

5340221462

READ THESE INSTRUCTIONS FIRST

Write in soft pencil.
Do not use staples, paper clips, glue or correction fluid.
Write your name, Centre number and candidate number on the Answer Sheet in the spaces provided unless this has been done for you.
DO **NOT** WRITE IN ANY BARCODES.

There are **forty** questions on this paper. Answer **all** questions. For each question there are four possible answers **A**, **B**, **C** and **D**.
Choose the **one** you consider correct and record your choice in **soft pencil** on the separate Answer Sheet.

Read the instructions on the Answer Sheet very carefully.

Each correct answer will score one mark. A mark will not be deducted for a wrong answer.
Any working should be done in this booklet.
Electronic calculators may be used.

This document consists of **20** printed pages.

© UCLES 2016

Data

speed of light in free space	$c = 3.00 \times 10^{8}\,\text{m s}^{-1}$
permeability of free space	$\mu_0 = 4\pi \times 10^{-7}\,\text{H m}^{-1}$
permittivity of free space	$\varepsilon_0 = 8.85 \times 10^{-12}\,\text{F m}^{-1}$
	$\left(\frac{1}{4\pi\varepsilon_0} = 8.99 \times 10^{9}\,\text{m F}^{-1}\right)$
elementary charge	$e = 1.60 \times 10^{-19}\,\text{C}$
the Planck constant	$h = 6.63 \times 10^{-34}\,\text{J s}$
unified atomic mass unit	$1\,\text{u} = 1.66 \times 10^{-27}\,\text{kg}$
rest mass of electron	$m_\text{e} = 9.11 \times 10^{-31}\,\text{kg}$
rest mass of proton	$m_\text{p} = 1.67 \times 10^{-27}\,\text{kg}$
molar gas constant	$R = 8.31\,\text{J K}^{-1}\,\text{mol}^{-1}$
the Avogadro constant	$N_\text{A} = 6.02 \times 10^{23}\,\text{mol}^{-1}$
the Boltzmann constant	$k = 1.38 \times 10^{-23}\,\text{J K}^{-1}$
gravitational constant	$G = 6.67 \times 10^{-11}\,\text{N m}^2\,\text{kg}^{-2}$
acceleration of free fall	$g = 9.81\,\text{m s}^{-2}$

© UCLES 2016

Formulae

uniformly accelerated motion	$s = ut + \frac{1}{2}at^2$ $v^2 = u^2 + 2as$
work done on/by a gas	$W = p\Delta V$
gravitational potential	$\phi = -\frac{Gm}{r}$
hydrostatic pressure	$p = \rho gh$
pressure of an ideal gas	$p = \frac{1}{3}\frac{Nm}{V}\langle c^2 \rangle$
simple harmonic motion	$a = -\omega^2 x$
velocity of particle in s.h.m.	$v = v_0 \cos \omega t$ $v = \pm\omega\sqrt{(x_0^2 - x^2)}$
Doppler effect	$f_o = \frac{f_s v}{v \pm v_s}$
electric potential	$V = \frac{Q}{4\pi\varepsilon_0 r}$
capacitors in series	$1/C = 1/C_1 + 1/C_2 + \ldots$
capacitors in parallel	$C = C_1 + C_2 + \ldots$
energy of charged capacitor	$W = \frac{1}{2}QV$
electric current	$I = Anvq$
resistors in series	$R = R_1 + R_2 + \ldots$
resistors in parallel	$1/R = 1/R_1 + 1/R_2 + \ldots$
Hall voltage	$V_H = \frac{BI}{ntq}$
alternating current/voltage	$x = x_0 \sin \omega t$
radioactive decay	$x = x_0 \exp(-\lambda t)$
decay constant	$\lambda = \frac{0.693}{t_{\frac{1}{2}}}$

© UCLES 2016

[Turn over

1 What is the order of magnitude of the Young modulus for a metal such as copper?

A 10^{-11} Pa **B** 10^{-4} Pa **C** 10^{4} Pa **D** 10^{11} Pa

2 The force F between two point charges q_1 and q_2, a distance r apart, is given by the equation

$$F = \frac{kq_1q_2}{r^2}$$

where k is a constant.

What are the SI base units of k?

A $\text{kg m}^3\text{ s}^{-4}\text{ A}^2$ **B** $\text{kg m}^3\text{ s}^{-4}\text{ A}^{-2}$ **C** $\text{kg m}^3\text{ A}^2$ **D** $\text{kg m}^3\text{ A}^{-2}$

3 An aeroplane can fly at a velocity X when moving through still air. When flying in wind the aeroplane's velocity relative to the ground is Y.

Which vector diagram shows the magnitude and direction of the wind velocity W?

A

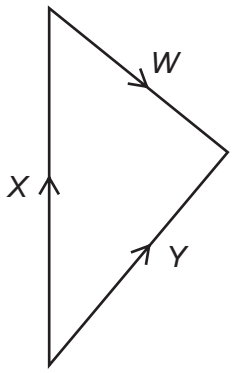

B

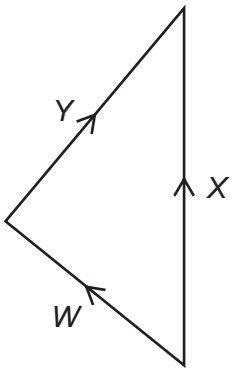

C

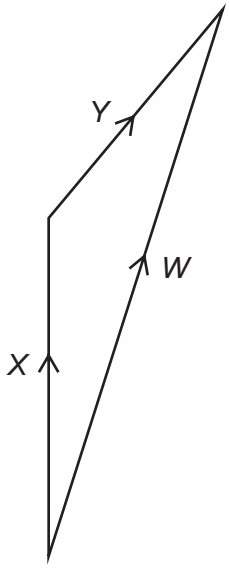

D

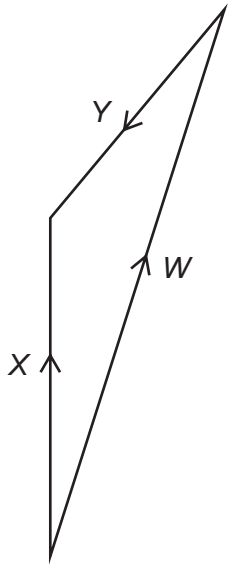

4 A voltmeter gives readings that are larger than the true values and has a systematic error that varies with voltage.

Which graph shows the calibration curve for the voltmeter?

A

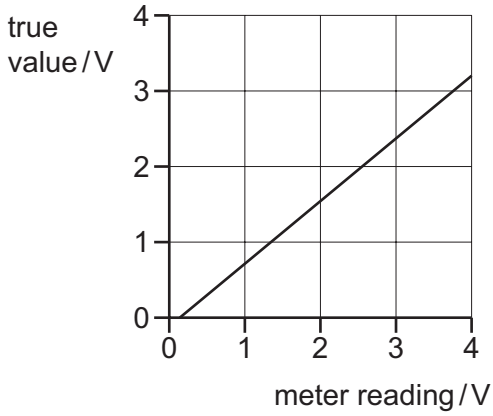

B

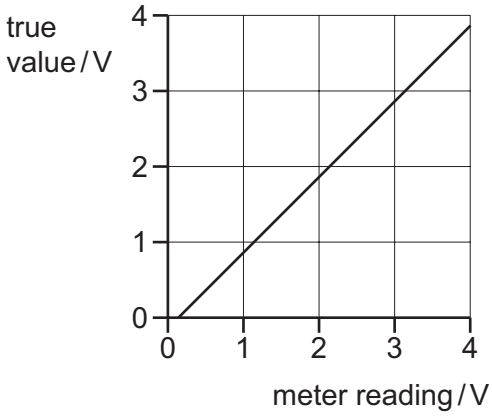

C

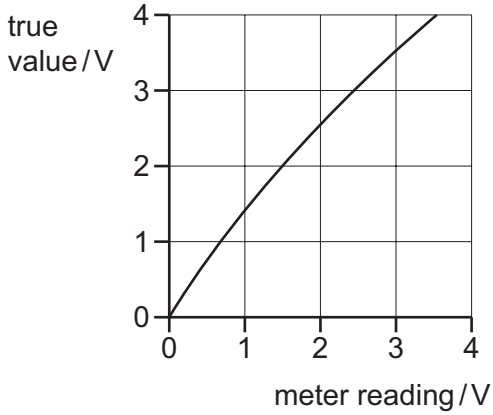

D

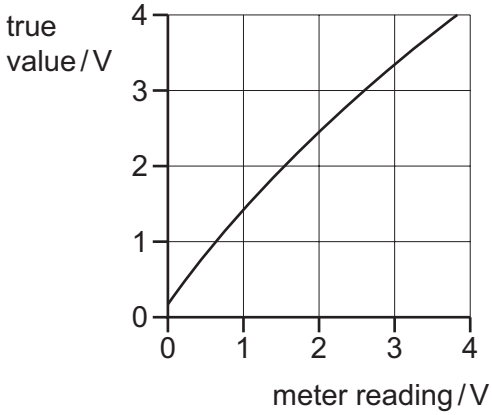

5 A student uses a cathode-ray oscilloscope (c.r.o.) to measure the period of a signal. She sets the time-base of the c.r.o. to $5\,\text{ms}\,\text{cm}^{-1}$ and observes the trace illustrated below. The trace has a length of 10.0 cm.

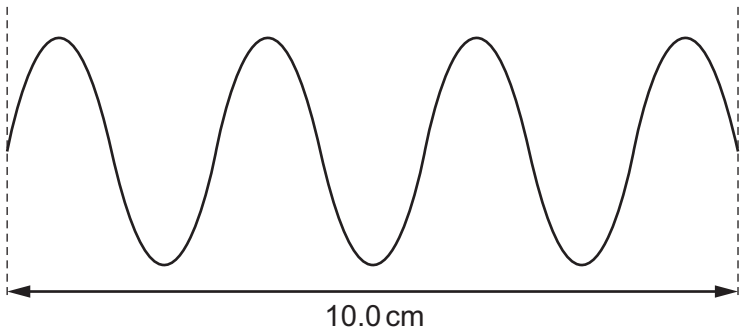

What is the period of the signal?

A $7.1 \times 10^{-6}\,\text{s}$ **B** $1.4 \times 10^{-5}\,\text{s}$ **C** $7.1 \times 10^{-3}\,\text{s}$ **D** $1.4 \times 10^{-2}\,\text{s}$

© UCLES 2016

6 A cyclist pedals along a raised horizontal track. At the end of the track, he travels horizontally into the air and onto a track that is vertically 2.0 m lower.

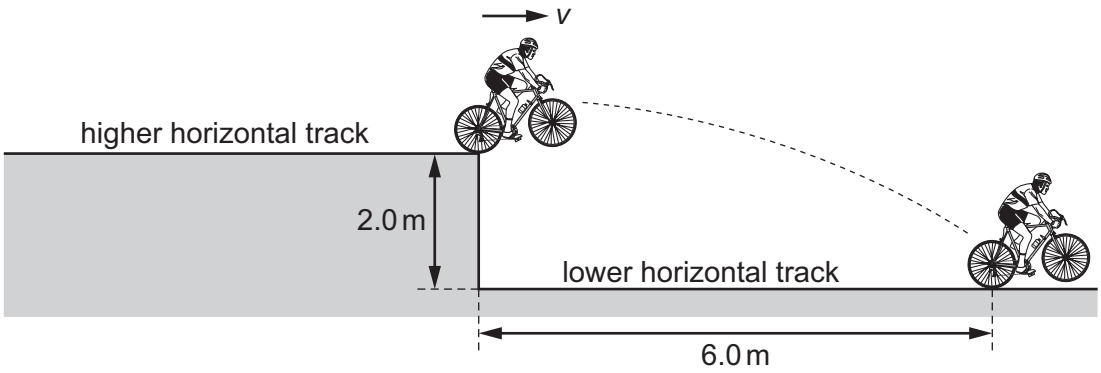

The cyclist travels a horizontal distance of 6.0 m in the air. Air resistance is negligible.

What is the horizontal velocity v of the cyclist at the end of the higher track?

A $6.3\,m\,s^{-1}$ **B** $9.4\,m\,s^{-1}$ **C** $9.9\,m\,s^{-1}$ **D** $15\,m\,s^{-1}$

7 An astronaut on the Moon, where there is no air resistance, throws a ball. The ball's initial velocity has a vertical component of $8.00\,m\,s^{-1}$ and a horizontal component of $4.00\,m\,s^{-1}$, as shown.

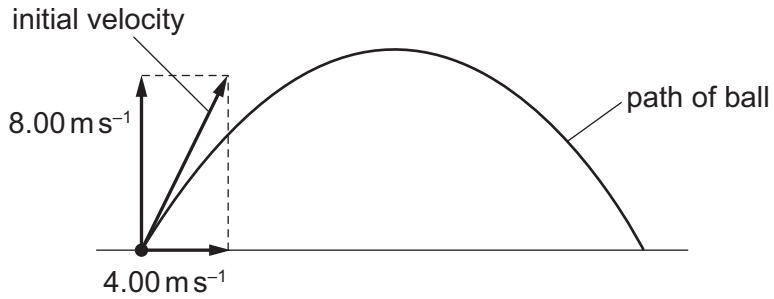

The acceleration of free fall on the Moon is $1.62\,m\,s^{-2}$.

What will be the speed of the ball 9.00 s after being thrown?

A $6.6\,m\,s^{-1}$ **B** $7.7\,m\,s^{-1}$ **C** $10.6\,m\,s^{-1}$ **D** $14.6\,m\,s^{-1}$

© UCLES 2016

8 A car is travelling at constant velocity. At time $t = 0$, the driver of the car sees an obstacle in the road and then brakes to a halt. The graph shows the variation with t of the velocity of the car.

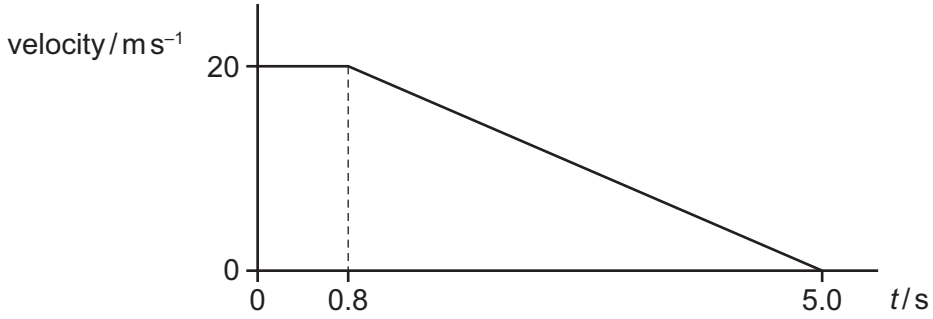

How far does the car travel in the 5.0 s after the driver sees the obstacle?

A 16 m **B** 42 m **C** 58 m **D** 84 m

9 A car is stationary at traffic lights. When the traffic lights change to green, the driver presses down sharply on the accelerator. The resultant horizontal force acting on the car varies with time as shown.

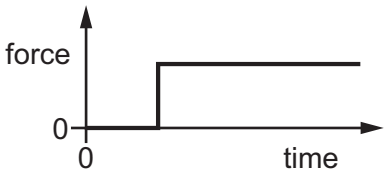

Which graph shows the variation with time of the speed of the car?

A

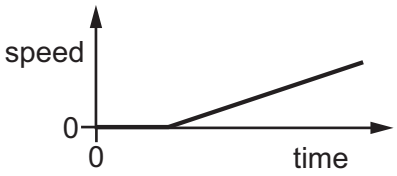

B

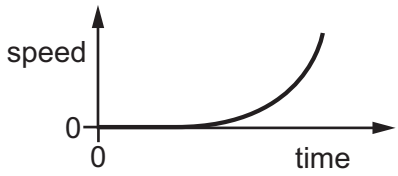

C

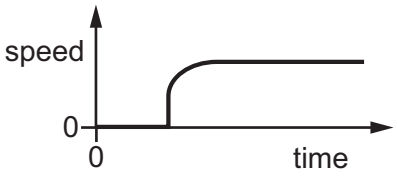

D

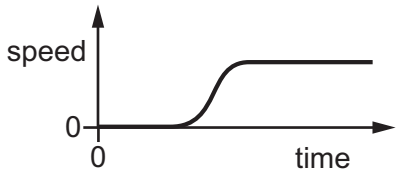

10 A beach-ball falls vertically from a high hotel window. Air resistance is **not** negligible.

Which graph shows the variation with time *t* of the acceleration *a* of the ball?

A

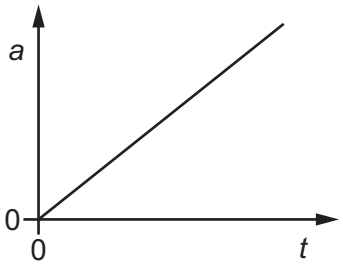

B

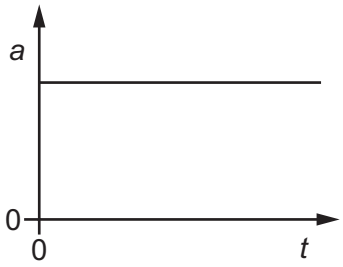

C

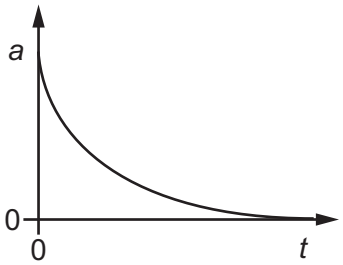

D

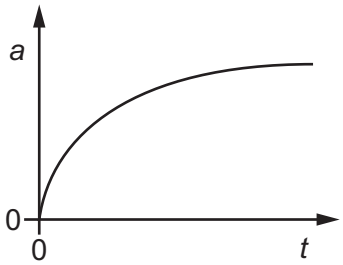

11 A car has mass *m*. A person needs to push the car with force *F* in order to give the car acceleration *a*. The person needs to push the car with force 2*F* in order to give the car acceleration 3*a*.

Which expression gives the constant resistive force opposing the motion of the car?

A *ma* **B** 2*ma* **C** 3*ma* **D** 4*ma*

© UCLES 2016

12 A box is shown resting on the ground. Newton's third law implies that four forces of equal magnitude are involved. These forces are labelled P, Q, R and S.

Forces P and Q act on the box. Forces R and S act on the Earth.

For clarity, the forces are shown slightly separated.

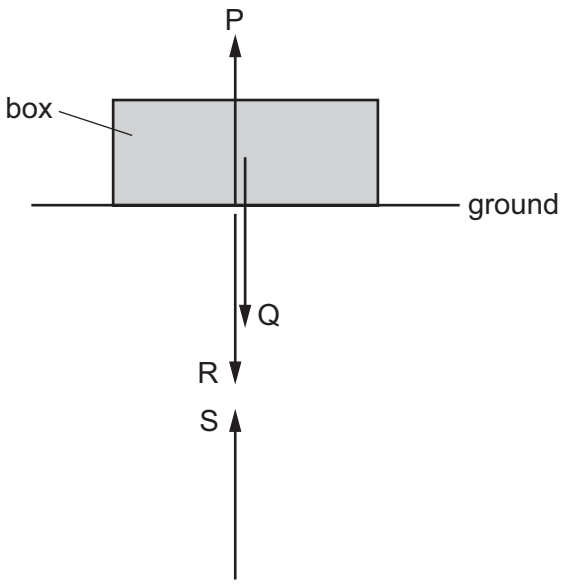

Which statement about the forces is correct?

A P is the equal and opposite force to Q and both are forces of contact.

B Q is the equal and opposite force to P and both are gravitational forces.

C R is the equal and opposite force to S and both are forces of contact.

D S is the equal and opposite force to Q and both are gravitational forces.

13 Two spheres travel along the same line with velocities u_1 and u_2. They collide and after collision their velocities are v_1 and v_2.



Which collision is **not** elastic?

	u_1 / m s^{-1}	u_2 / m s^{-1}	v_1 / m s^{-1}	v_2 / m s^{-1}
A	2	–5	–5	–2
B	3	–3	0	6
C	3	–2	1	6
D	5	2	3	6

© UCLES 2016

14 A submarine has circular windows of diameter 0.30 m. The windows can experience a maximum external pressure of 660 kPa before they crack.

What is the minimum external force needed to crack the windows?

A 47 000 N **B** 190 000 N **C** 310 000 N **D** 620 000 N

15 Four beams of the same length each have three forces acting on them.

Which beam has both zero resultant force and zero resultant torque acting?

A

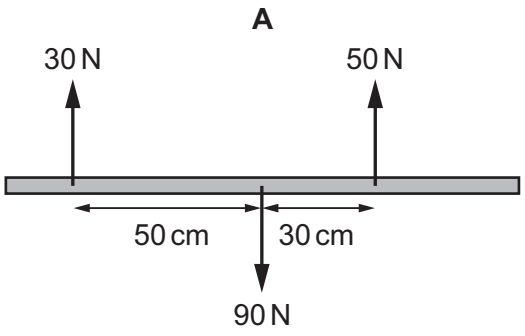

B

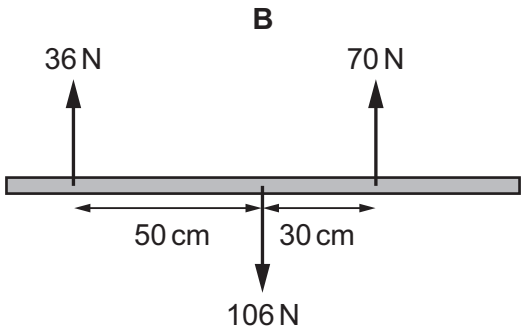

C

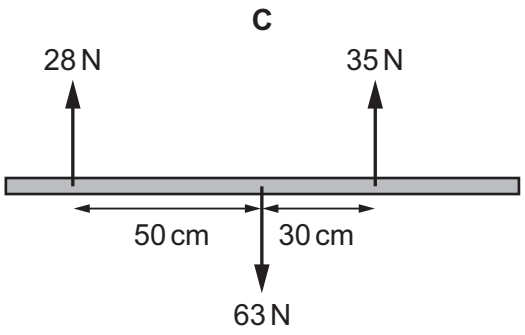

D

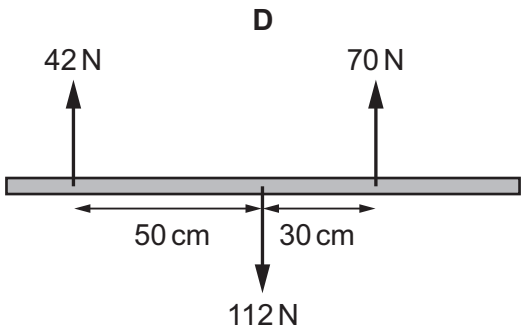

© UCLES 2016

16 An air-conditioning unit is supported by a rigid beam PQ, as shown.

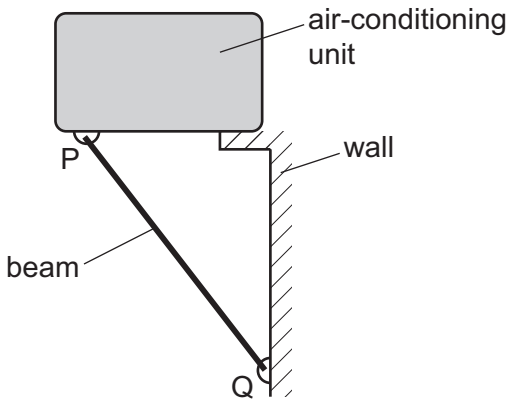

Which diagram shows the directions of the horizontal and vertical forces acting on the ends of the beam?

A

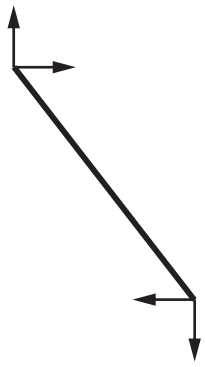

B

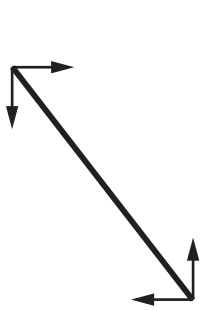

C

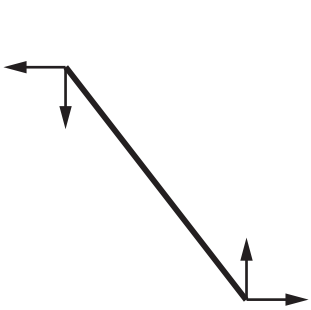

D

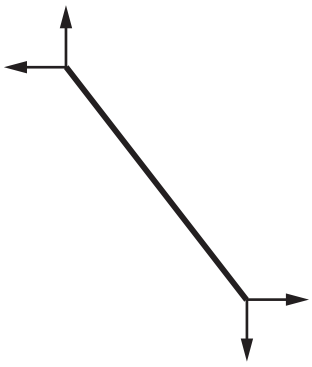

17 A hydroelectric power station uses the gravitational potential energy of water to generate electrical energy.

In one particular power station, the mass of water flowing per unit time is $1.5 \times 10^5\,\text{kg}\,\text{s}^{-1}$. The water falls through a height of 120 m.

The electrical power generated is 100 MW.

What is the efficiency of the power station?

A 5.6% **B** 43% **C** 57% **D** 68%

© UCLES 2016

18 An engine transforms thermal energy into mechanical work. The engine takes in thermal energy Q_{in} from a heat source and gives out thermal energy Q_{out} to a heat sink, producing useful work W.

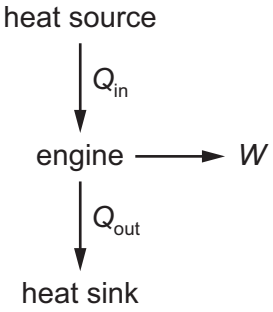

What is the efficiency of this engine?

A $\frac{W}{Q_{in} + Q_{out}}$ **B** $\frac{W}{Q_{in} - Q_{out}}$ **C** $\frac{W}{Q_{in}}$ **D** $\frac{W}{Q_{out}}$

19 A truck of mass 500 kg moves from rest at the top of a section of track 400 m long and 30 m high, as shown. The frictional force acting on the truck is 250 N throughout its journey.

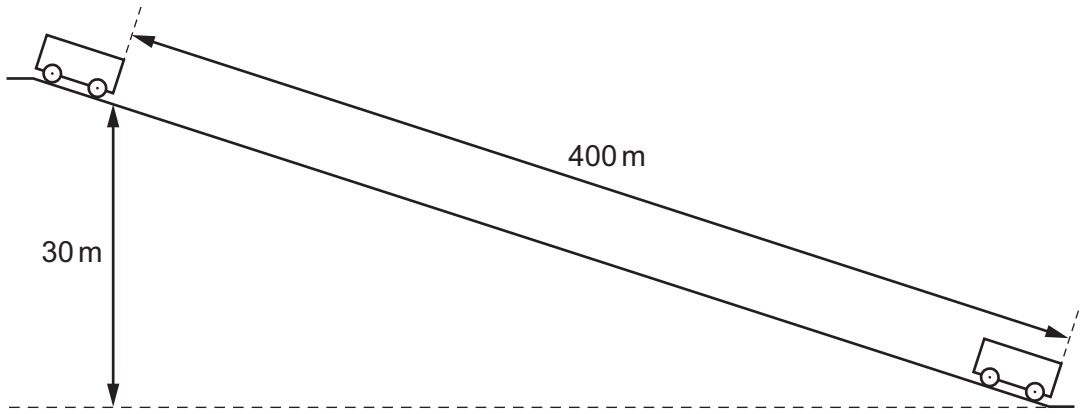

What is the final speed of the truck?

A $14\,m\,s^{-1}$ **B** $24\,m\,s^{-1}$ **C** $31\,m\,s^{-1}$ **D** $190\,m\,s^{-1}$

20 Which condition must apply for the work done by an expanding gas to be $p\Delta V$, where p is the pressure of the gas and ΔV is its change in volume?

A No thermal energy must be supplied to the gas.

B The expansion must be at a constant rate.

C The pressure must be constant.

D The temperature of the gas must be constant.

© UCLES 2016

21 A metal wire is stretched to breaking point and the force-extension graph is plotted.

Which graph is correctly labelled with the elastic region, the plastic region and the area representing the work done to stretch the wire until it breaks?

A

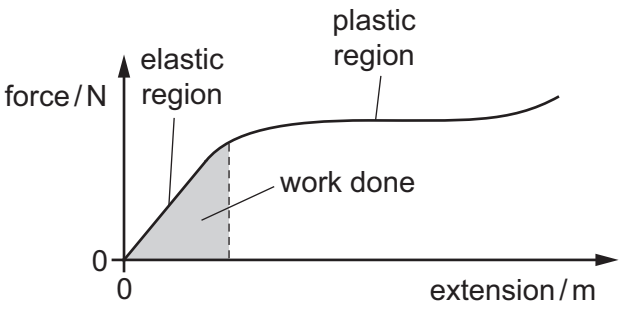

B

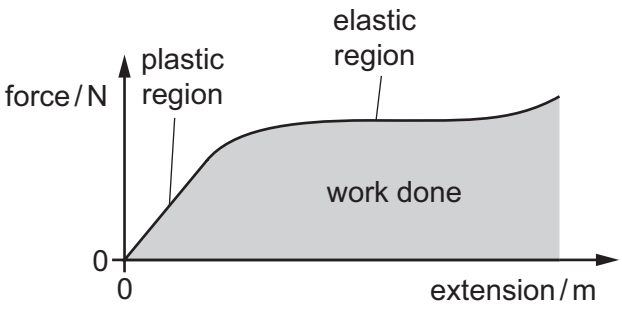

C

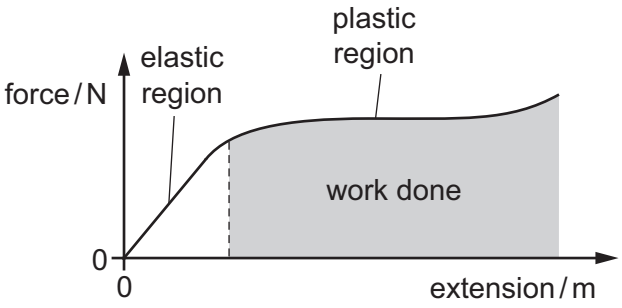

D

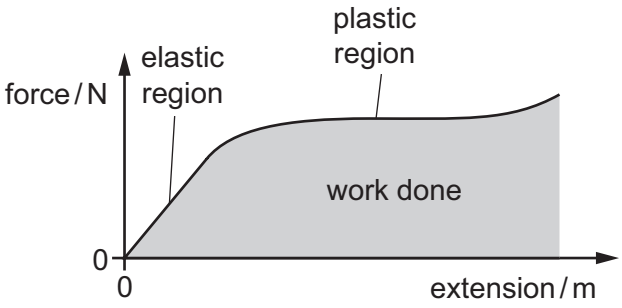

22 A copper wire hangs vertically from a fixed point. A load is attached to the lower end of the wire producing an extension x. The wire obeys Hooke's law.

Which single change gives an extension $2x$?

A Halve the cross-sectional area of the wire.

B Halve the diameter of the wire.

C Halve the length of the wire.

D Halve the load on the wire.

23 The table shows the wavelengths of five electromagnetic waves.

Which row correctly identifies the principal radiation for each of these wavelengths?

	10^{-14} m	10^{-10} m	10^{-6} m	10^{-2} m	10^{2} m
A	gamma ray	X-ray	infra-red	microwave	radio wave
B	radio wave	microwave	infra-red	X-ray	gamma ray
C	radio wave	microwave	ultraviolet	infra-red	X-ray
D	X-ray	infra-red	ultraviolet	microwave	radio wave

24 The diagram shows an experiment to produce a stationary wave in an air column. A tuning fork, placed above the column, vibrates and produces a sound wave. The length of the air column can be varied by altering the volume of the water in the tube.

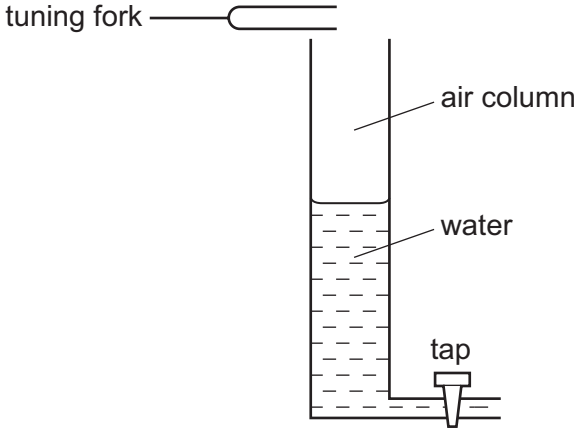

The tube is filled and then water is allowed to run out of it. The first two stationary waves occur when the air column lengths are 0.14 m and 0.42 m.

What is the wavelength of the sound wave?

A 0.14 m **B** 0.28 m **C** 0.42 m **D** 0.56 m

© UCLES 2016

25 The graph shows the variation with time of the displacement X of a gas molecule as a continuous sound wave passes through a gas.

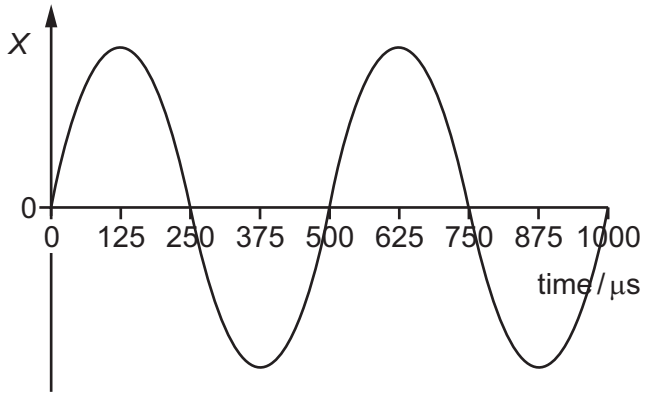

The velocity of sound in the gas is $330\,m\,s^{-1}$. All the graphs below have the same zero time as the graph above.

What is the displacement-time graph for a molecule that is a distance of 0.165 m further away from the source of the sound?

A

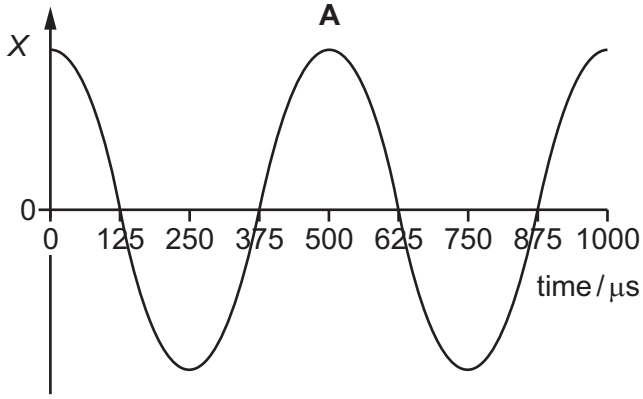

B

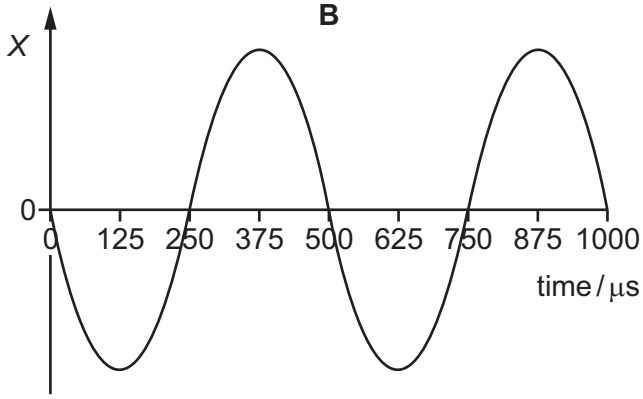

C

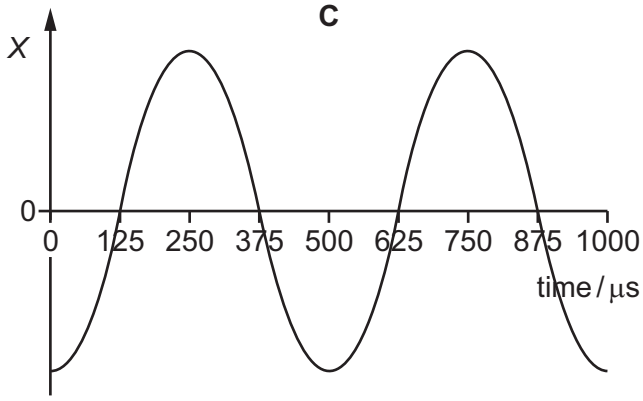

D

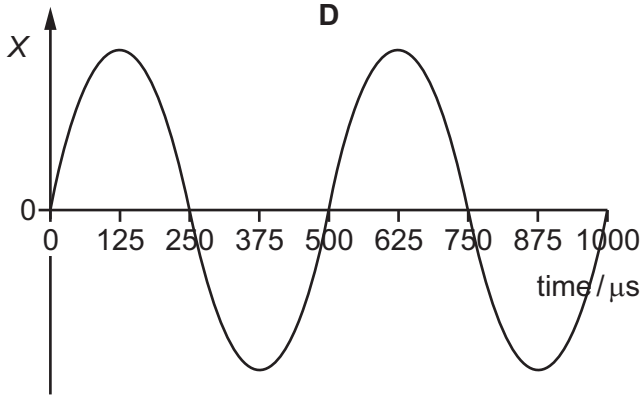

26 The warning signal on an ambulance has a frequency of 600 Hz. The speed of sound is 330 m s^{-1}. The ambulance is travelling with a constant velocity of 25 m s^{-1} towards an observer.



Which overall change in observed frequency takes place between the times at which the ambulance is a long way behind the observer and when it is a long way in front of the observer?

A 49 Hz **B** 84 Hz **C** 91 Hz **D** 98 Hz

27 Diagrams X and Y show the passage of water waves around an obstacle and through a gap.

The thick lines are barriers to the waves and each thin line represents a wavefront.

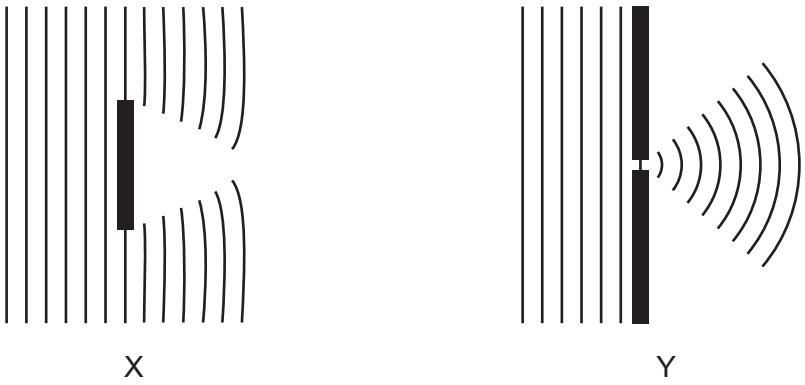

Which statement is correct?

A Diagrams X and Y both illustrate diffraction.

B Diagrams X and Y both illustrate interference.

C Only diagram X illustrates interference.

D Only diagram Y illustrates diffraction.

28 The diagram shows a long rope fixed at one end. The other end is moved up and down, setting up a stationary wave.

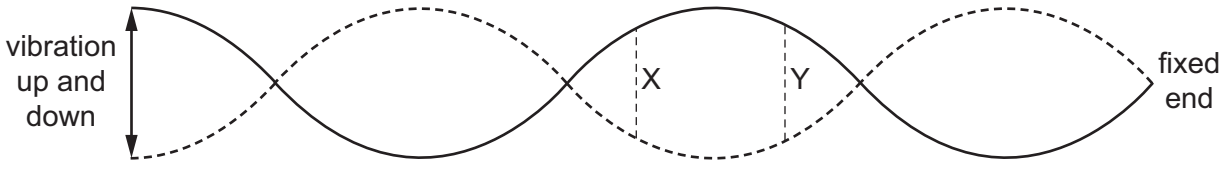

What is the phase difference between the oscillations at X and at Y?

A 0 **B** 45° **C** 90° **D** 135°

© UCLES 2016

29 A diffraction grating is used to measure the wavelength of monochromatic light.

The spacing of the slits in the grating is 1.15×10^{-6} m. The angle between the first order diffraction maxima is 60.0°, as shown in the diagram.

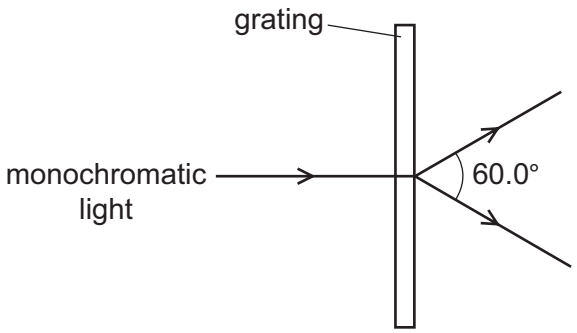

What is the wavelength of the light?

A 288 nm **B** 498 nm **C** 575 nm **D** 996 nm

30 Which path shows a possible movement of an electron in the electric field shown?

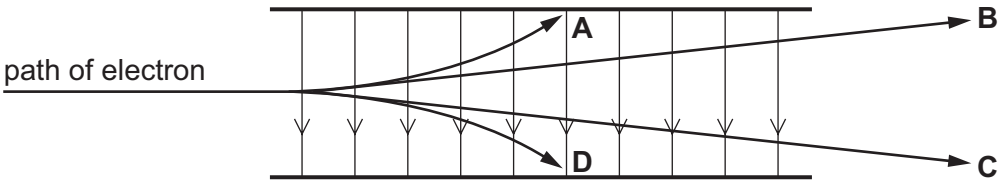

31 The diagram shows an electric field pattern caused by two positive and two negative point charges of equal magnitude placed at the four corners of a square.

In which direction does the force act on an electron at point X?

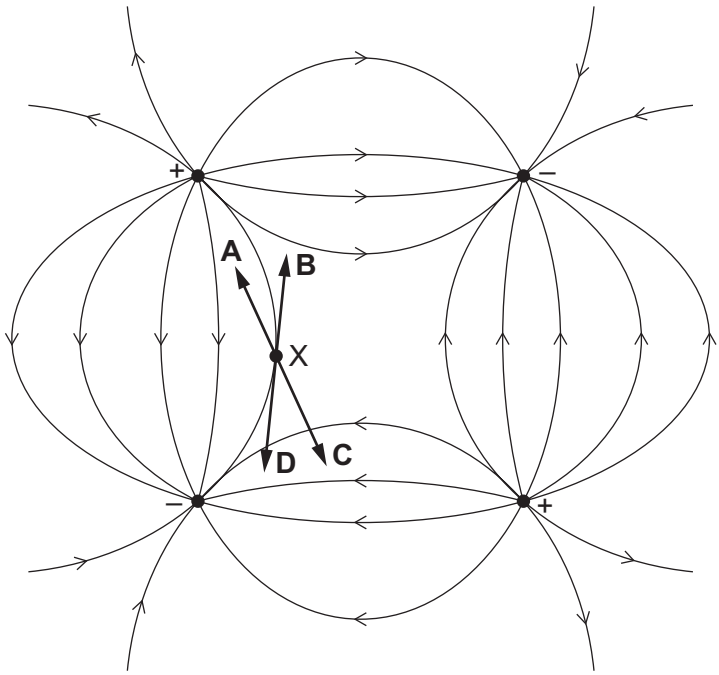

32 Two large horizontal metal plates are separated by 4 mm. The lower plate is at a potential of –80 V.



Which potential should be applied to the upper plate to create an electric field of strength 60 000 V m^{-1} upwards in the space between the plates?

A –320 V **B** –160 V **C** +160 V **D** +320 V

33 An electric kettle is marked 3.10 kW. It is used with an electrical supply of 240 V.

What is the electric current in the kettle and what is the kettle's electrical resistance when working?

	current / A	resistance / Ω
A	0.0129	18 600
B	0.0770	3100
C	12.9	18.6
D	12.9	3100

34 A thick copper wire is connected to a thin copper wire in series with a cell, as shown.

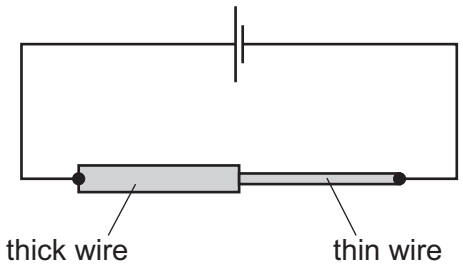

What is significantly **less** in the thick wire than in the thin wire?

A the charge passing a point per unit time

B the drift speed of the electrons

C the number density of the free electrons

D the number of free electrons passing a point per unit time

35 What is a typical value for the order of magnitude of the resistivity of copper?

A $10^{-13}\,\Omega$m **B** $10^{-8}\,\Omega$m **C** $10^{-3}\,\Omega$m **D** $10^{2}\,\Omega$m

© UCLES 2016

36 In the circuit shown, the reading on the ammeter is zero.

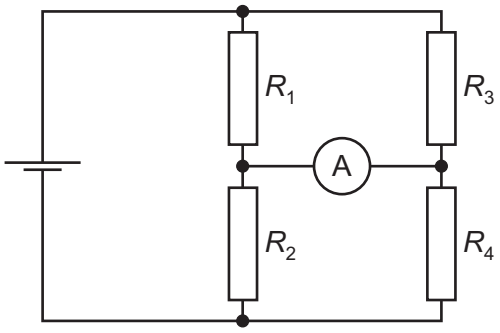

The four resistors have different resistances R_1, R_2, R_3 and R_4.

Which equation is correct?

A $R_1 - R_3 = R_2 - R_4$

B $R_1 \times R_3 = R_2 \times R_4$

C $R_1 - R_4 = R_2 - R_3$

D $R_1 \times R_4 = R_2 \times R_3$

37 The diagram shows currents I_1, I_2, I_3, I_4 and I_5 in different branches of a circuit.

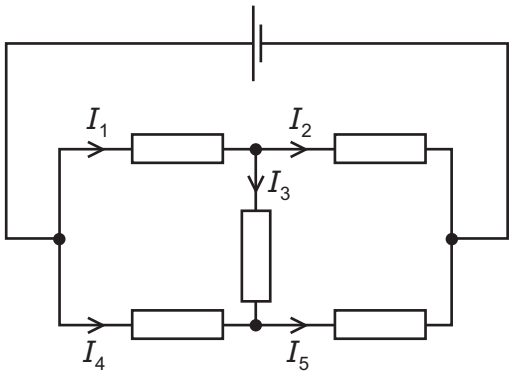

Which equation is correct?

A $I_1 = I_2 + I_3$

B $I_2 = I_1 + I_3$

C $I_3 = I_4 + I_5$

D $I_4 = I_5 + I_3$

© UCLES 2016

38 What is a proton?

A a hadron

B a particle consisting of two down quarks and one up quark

C a positive fundamental particle

D a positive lepton

39 What are the correct descriptions of a γ-ray and a β^- particle?

	γ-ray	β^- particle
A	high-speed electron	electromagnetic radiation
B	electromagnetic radiation	helium-4 nucleus
C	electromagnetic radiation	high-speed electron
D	high-speed electron	helium-4 nucleus

40 In a radioactive decay series, three successive decays each result in a particle being emitted.

The first decay results in the emission of a β^- particle. The second decay results in the emission of an α particle. The third decay results in the emission of another β^- particle.

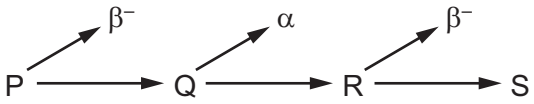

Nuclides P and S are compared.

Which statement is correct?

A P and S are identical in all respects.

B P and S are isotopes of the same element.

C S is a different element of lower atomic number.

D S is a different element of reduced mass.

Permission to reproduce items where third-party owned material protected by copyright is included has been sought and cleared where possible. Every reasonable effort has been made by the publisher (UCLES) to trace copyright holders, but if any items requiring clearance have unwittingly been included, the publisher will be pleased to make amends at the earliest possible opportunity.

To avoid the issue of disclosure of answer-related information to candidates, all copyright acknowledgements are reproduced online in the Cambridge International Examinations Copyright Acknowledgements Booklet. This is produced for each series of examinations and is freely available to download at www.cie.org.uk after the live examination series.

Cambridge International Examinations is part of the Cambridge Assessment Group. Cambridge Assessment is the brand name of University of Cambridge Local Examinations Syndicate (UCLES), which is itself a department of the University of Cambridge.

© UCLES 2016